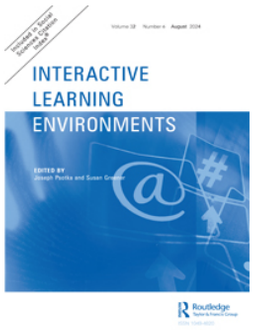

Interactive Learning Environments

ISSN: 1049-4820 (Print) 1744-5191 (Online) Journal homepage: www.tandfonline.com/journals/nile20

Artificial Intelligence image recognition using self-regulation learning strategies: effects on vocabulary acquisition, learning anxiety, and learning behaviours of English language learners

Ting-Chia Hsu, Ching Chang & Tien-Hsiu Jen

To cite this article: Ting-Chia Hsu, Ching Chang & Tien-Hsiu Jen (2024) Artificial Intelligence image recognition using self-regulation learning strategies: effects on vocabulary acquisition, learning anxiety, and learning behaviours of English language learners, Interactive Learning Environments, 32:6, 3060-3078, DOI: 10.1080/10494820.2023.2165508

To link to this article: https://doi.org/10.1080/10494820.2023.2165508

Published online: 24 Jan 2023.

Submit your article to this journal

Article views: 4602

View related articles

View Crossmark data

Citing articles: 65 View citing articles

Full Terms & Conditions of access and use can be found at
https://www.tandfonline.com/action/journalInformation?journalCode=nile20

INTERACTIVE LEARNING ENVIRONMENTS
2024, VOL. 32, NO. 6, 3060–3078
https://doi.org/10.1080/10494820.2023.2165508

Routledge
Taylor & Francis Group

Check for updates

Artificial Intelligence image recognition using self-regulation learning strategies: effects on vocabulary acquisition, learning anxiety, and learning behaviours of English language learners

Ting-Chia Hsu, Ching Chang and Tien-Hsiu Jen

Department of Technology Application and Human Resource Development, National Taiwan Normal University, Taipei, Taiwan

ABSTRACT
Young learners' vocabulary learning needs interaction with language input when they are engaged in an activity. Given that AI-supported image recognition technologies offer hands-on learning in authentic contexts, and that self-regulated learning (SRL) enables learners to monitor and evaluate their learning when interacting with multi-sensory experiences of the target vocabulary, this study investigated how AI image recognition technologies along with SRL affect students' vocabulary acquisition, self-regulation, and learning anxiety in the language classroom, and further analysed students' learning behaviours during learning. A total of 47 Grade 3 students participated. Students in the experimental group (EG) assigned to AI-supported image recognition (AI-IR) with SRL, learnt with vocabulary from realia using AI-IR with SRL. Students in the control group (CG) assigned to AI-supported optical character recognition (AI-OCR) technology with SRL, learnt with vocabulary from printed texts using AI-OCR with SRL. Results indicated that the EG students significantly outperformed the CG students in terms of vocabulary acquisition, although no significant differences were found in the two groups' self-regulation or learning anxieties. Behavioural analysis revealed that the EG students had greater development of their self-regulation and lower learning anxiety. Lastly, suggestions and limitations are provided for further research.

ARTICLE HISTORY
Received 11 April 2022
Accepted 2 January 2023

KEYWORDS
Image recognition technologies; self-regulation; learning anxieties; learning behaviours

1. Introduction

Inspite of decades of language learning promotion for younger learners, students, and particularly younger learners in English as a Foreign Language (EFL) contexts, still face challenges in vocabulary learning because learning a new word involves diverse dimensions, including pronunciation, spelling, meaning, usages, and part of speech for use in daily-life settings (Nation, 2001). The process of learning vocabulary is often a teacher-dominated lecture with boring instruction (Zou et al., 2021). To prepare students to cope with vocabulary acquisition, explicit learning activities, such as hands-on exercises and multi-sensory experiences of repeated exposure to target words, are considered effective for successful learning because they situate learners in noticing certain nuances of knowledge and impose cognitive effort for effective retention of new words (Shadiev et al., 2020b).

CONTACT Ching Chang chingtw2006@gmail.com
© 2023 Informa UK Limited, trading as Taylor & Francis Group

1.1. Vocabulary

Of particular interest in this study is language teaching for younger English as a Foreign Language (EFL) learners, for whom the biggest challenge in English lessons is the threat created by the learning climate (Shadiev et al., 2020b). Learning that emphasises dull memorisation of words is usually considered as a boring task (Zou et al., 2021). This is often due to a lack of engaged activity for using the target language (Hwang et al., 2018; Shadiev et al., 2020b) in a way that is responsive to their association of words. Thus, establishing lower anxiety, engaging, and meaningful learning context is essential.

1.2. Image-to-text-recognition (ITR)

Image-to-text-recognition (ITR) learning has recently gained attention in education. It means that the target texts can be generated by accessing text-based input (e.g. OCR techniques), non-text input (e.g. pictures using Google image service), or object input (e.g. Google Computer Vision or machine learning techniques). ITR was developed from mathematical applications (e.g. Pacheco-Venegas et al., 2015) to scientific inquiry learning (e.g. Huang et al., 2022). Some educators have found its potential and have designed ITR activities for EFL learning, such as vocabulary learning (Shadiev et al., 2020b), English writing (Nguyen et al., 2020) and plant knowledge in English (Sun et al., 2015). According to Hwang et al.'s (2022) review, ITR offers the potential to meet learners' needs by combining multiple types of recognition to generate texts, such as using visual representation input via one's eyes and text-to-speech input via one's ears. Apart from leveraging ITR technologies to stimulate students' imagination in language learning, a student-centred approach with a pedagogically-informed instructional design to facilitate students' learning has been suggested, along with continually integrating innovative technologies (e.g. artificial intelligence) to promote the accuracy of ITR while immersing students in real-world contexts to access target words. The study aimed to tailor AI-supported image recognition (AI-IR) and to administer student-centred activities using supervised machine learning techniques with high accuracy and fast speed for image classification (Shadiev et al., 2020a). Compared to learning with AI optical character recognition (AI-OCR) supporting the conversion of printed text only, the AI-IR integrated multiple modalities of vocabulary information can offer the conversion of printed text images and recognise real objects.

Such integrated learning activities cannot be carried out without carefully designing instructional tasks and a proper theoretically-underpinned approach. Indeed, simply putting these components (AI-IR, student-centred learning, vocabulary learning) together does not guarantee the development of the expected results. This AI-IR task was tailored to not only attract young students' attention to learn words, which would help narrow the gap between vocabulary knowledge and actual objects, but also to engage students in reflecting upon their recognition learning while reducing their learning anxiety.

1.3. Self-regulated learning (SRL)

One way to attain the expected outcomes when involving students in student-centred learning is through the cycle of the self-regulated learning (SRL) approach. SRL is suggested by researchers as an effective intervention method that involves learners in proactively identifying their goals, examining their strategies to reach the goals, and self-evaluating their progress (Liu et al., 2014). The rationale of using SRL in vocabulary learning is that it engages students in learning in an ITR multi-sensory stimulation, and in turn, locates and examines their intended vocabulary when involved in meaningful hands-on repeated exposure to vocabulary learning. Meanwhile, it empowers students to reflect on their learning and facilitates their notice of the interplay of target-language use and knowledge of words learnt from the textbook in the process of AI-IR learning. Although

several studies using SRL in vocabulary activities have evidenced students' better performance (e.g. Sahin Kızıl & Savran, 2018), studies using SRL with AI-IR remain scarce.

1.4. Student-centred activity with hands-on text IR exercise

The premise of performing AI-IR is a hands-on activity construction that affords students opportunities for target-word interaction (Hwang et al., 2022). This activity construction requires an open environment that offers students language input as a way of freely accessing learnt words, production of language output as a way of completing the required task (e.g. spelling), and recall of their learning from reflection upon their learnt words in AI-IR recognition (Shadiev et al., 2020a). A student-centred activity adopting a SRL mechanism actively engages students in target-word learning. For this study, a learning task regarding Tom's daily routine was tailored that required students to access the assigned target words, which not only provided opportunities for comprehensive input and language output, but also facilitated students' reflection on recalled learnt words. The explicit arrangement of target-words learning content embedded in the hands-on recognition exercise can be fitted with students' need for the promotion of vocabulary learning via a creative AI-IR with an SRL approach without generating cognitive load, as recognition technologies without careful instructional design could create redundant information involving unnecessary lexical output (Hwang et al., 2022). Concisely, participants not only perform target-word development using ITR technology, but also work on SRL using the assigned learning task in the student-centred activity.

1.5. Learning behaviours

While conducting ITR vocabulary learning using SRL, it is essential to work through certain phases. It may not be easy to unveil the students' learning process without actually analysing students' behaviours regarding how they conduct ITR activities to access input, produce output, and recall the learnt words by reflection on their ITR learning. For example, the learning patterns of viewing translation and writing down spelling after successfully recognising words would reveal how students freely locate target words, process information via their hands-on recognition actions, and complete requirements after ensuring corrected answers in the task. Briefly, investigating how these two particular groups using different recognition technologies acquire vocabulary while supporting SRL should be addressed.

1.6. Anxiety

While the elements of AI-IR, SRL, and vocabulary acquisition are involved in instructional design to meet anticipated outcomes, it is vital to reduce potential learning anxiety for language learners. Offering a warm learning climate to enhance learners' participation in this technology-integrated vocabulary learning is important, as two groups using different technologies might demonstrate unique learning behaviours or different methods to cope with the given task when they first use recognition technologies to access target words. Thus, investigating how these two particular groups of EFL learners dealt with vocabulary learning, their self-regulated strategies, and potential language anxiety in the proposed study needs to be highlighted.

These claims above require further investigation because using AI image recognition technology to enhance EFL vocabulary learning in instructional activities remains underexplored. Thus, the current study seeks to provide empirical evidence regarding the impact of AI image recognition application on the facilitation of vocabulary acquisition in the context of each of the two teaching strategies (AI-IR with SRL and AI-OCR with SRL), while examining how SRL and English learning anxiety manifest in a young EFL classroom-based learning environment. Furthermore, students' learning behaviours in both modes were also discussed to identify the possible benefits of the proposed study. The research questions of this study are as follows:

(1) Did the students who used the AI-IR approach with SRL acquire more English vocabulary than those who used the AI-OCR approach with SRL?
(2) Did the students who used the AI-IR approach with SRL demonstrate better self-regulated strategies than those who used the AI-OCR approach with SRL?
(3) Did the students who used the AI-IR approach with SRL have lower anxiety about learning English than those who used the AI-OCR approach with SRL strategies?
(4) Were there any differences in the behaviour patterns of those learning with the AI-IR approach and the AI-OCR approach?

2. Literature review

2.1. Vocabulary with SRL through ITR

Learning new words is a key issue in language pedagogy since vocabulary is a significant element in language competence (Schmitt, 2008). However, acquiring vocabulary is a challenge, as the way of learning demands conscious memorisation. Monotonous rote vocabulary learning techniques are common and stress conscious concentration on the meanings of the words (Zou et al., 2021). The results are not only unsatisfactory due to the decline of memory retention over time, but also fail to situate students in the scenarios grounded in authenticity due to simply memorising facts about abstract or concrete items (Zou et al., 2021). Young EFL learners have even more challenges with such vocabulary acquisition (Shadiev et al., 2020b). This appears to be a major drawback in the advancement of mastering English learning, as vocabulary acquisition is largely associated with other aspects of English competence (Johnson et al., 2016).

One promising strategy to enhance vocabulary learning is through SRL. It is a self-directed learning approach which aims to develop students' mental skills to enhance learning (Zimmerman, 2002). Three cyclical phases have been identified, namely the forethought phase, the performance phase, and the self-reflection phase. According to Zimmerman (2002), the forethought phase involves goal setting and strategy planning after task analysis. The performance phase manifests self-monitoring, self-control, and self-awareness after deploying planned strategies to find out the events or solutions. The last self-reflection phase indicates self-evaluation of the correlation between the strategy use and learning results with the improved learning performance. Zimmerman (2002) provided a summary of the benefits of SRL, including cognitive development of academic performance and learning confidence, self-directed learning by taking control of their own learning, and better retention and learning satisfaction. Sahin Kızıl and Savran (2018) further addressed the effect of SRL on vocabulary learning when supported by technology. Zimmerman's (2002) and Sahin Kızıl and Savran's (2018) studies presented the similarities of the benefits of SRL for learning; yet, ITR activities integrated into SRL to facilitate vocabulary acquisition have not been fully investigated.

2.2. ITR technologies

Although there has been no direct report on improving vocabulary using ITR with SRL, ITR has been observed to improve language learning such as English writing using Google Computing Version (Nguyen et al., 2020), and vocabulary learning using Google Caption Image (Shadiev et al., 2020b). As ITR affords students access to labels, pictures, or objects of target words, it helps them develop an associative bridge among mental processes in visual and verbal models, prior knowledge of target words, and the information (e.g. words) presented in the real world to facilitate the cognitive process of vocabulary acquisition. The idea of ITR is also supported by dual-coding theory (Paivio, 1986; Shadiev et al., 2020b), where visual and pictorial representations supported by ITR are conducive to building associations to organise information. It, thus, facilitates information remembering in one's working memory when associations are successfully connected (Peker et al., 2018; Shadiev et al., 2020b). Unlike printed text with labels only to present vocabulary

knowledge, ITR helps make language input as comprehensible as possible (Peker et al., 2018; Shadiev et al., 2020b). Such flexibility and adaptation of classroom implementation have thus received attention in the development of SRL for language learning.

It is this specific hands-on target-word generation nature involved in ITR learning that drew our attention to designing student-centred vocabulary production. It is not reasonable to expect students to fully recall all accessed words. Rather, free input and output access underlying the hands-on nature of the ITR vocabulary activity, along with the assigned tasks with explicit vocabulary items, was tailored to fortify students' retention when they were working on their vocabulary acquisition development. A series of target-word generations in a session of the ITR activity could not only potentially accumulate repeated exposure to target words (Shadiev et al., 2020a); students could also develop their SRL by revising their strategy use, validating their recognition results, and ensuring correlation of their planned recognition strategies in their interaction of target-word learning (Sahin Kızıl & Savran, 2018). This fits with our desired goals of the present study for SRL development and target-word acquisition.

2.3. AI-IR

It must be clarified that two dimensions of multi-sensory ITR experiences were involved in the current study: the AI-IR design for the EG and the AI-OCR design for the CG. The AI-IR uses a supervised machine learning model for image classification that allows the use of objects to interact with the target words, as suggested by Hwang et al. (2022) for innovative technology adoption to explore possible benefits for learning and improving the accuracy of ITR recognition. Such techniques detect objects or images through captured images, and display relevant information on the device when a target is recognised (Nguyen et al., 2018). The AI-IR app adopts multiple forms of recognition technology, affording users translation, pronunciation, a text-to-speech function, and a dictionary database to interact with the target words, along with tactile enhancement which particularly caters for young learners. Nguyen et al. (2020) combined multiple recognition technologies such as AI and Google's Computer Vision to support English writing by generating texts based on real-time contexts. Although Nguyen et al.'s (2020) focus was English vocabulary, unlimited English vocabulary generation surrounded by students' real-time contexts negatively impeded learning due to unexpected cognitive load and redundant information production. Thus, assigning certain items of target words without causing cognitive loads in the ITR design should be taken into account.

2.4. Two modes of the ITR technologies

AI-OCR technologies (e.g. Google translate apps) that can scan labels into editable texts were also employed for the comparison. Although it provides support for printed labels *only,* AI-OCR also affords EFL learners multi-sensory experiences by offering targeted translation and text-to-speech functions to access the target language and receive instant responses, along with aural reinforcement to aid vocabulary development (Murtisari et al., 2019). Tsai (2019) provided empirical evidence of the effects of AI-OCR to facilitate EFL academic writing, while Groves and Mundt's (2015) research evidenced that AI-OCR can facilitate students' academic learning, although translation accuracy remained a concern. Both studies demonstrated the effectiveness of AI-OCR in learning, although their foci were not English vocabulary learning.

Although both technologies offer the potential to facilitate learning, we were keen to explore vocabulary learning with AI-IR when students were situated in the language learning classroom using ITR. As stated before, the AI-IR reinforcement appears to jointly establish a better learning climate, thus potentially facilitating cognitive development of vocabulary acquisition while reducing potential learning anxiety in the formal EFL classroom, compared to that in AI-OCR. The experiment was to monitor their ITR use, and to ensure that they carried out the assigned learning task when they were involved in the SRL learning process.

2.5. Learning anxiety

In language learning scenarios, anxiety is related to the "worry and negative emotional reaction aroused when learning or using a second language" (MacIntyre 1999, p. 27). Many empirical findings have demonstrated that anxiety stops learners from participating in learning activities (e.g. Cakici, 2016), and negatively predicts results in EFL or second language contexts (e.g. Saranraj & Meenakshi, 2016). However, one who attempts to understand anxiety and analyse the cause of where the anxiety stems from would understand learners' problems first, and make an effort to facilitate their learning achievement (Hu & Wang, 2014). Indeed, appropriate teaching design in class helps reduce student anxiety. Helping students cope with potentially conditional anxieties while establishing a welcoming learning climate that is less stressful are two key strategies to reduce students' anxiety (Horwitz et al., 1986).

Meanwhile, instructors must lower students' anxiety if tailored activities are to meet students' needs along with making the learning environment less stressful. In the current study, ITR was a medium for the student-centred activity that facilitated attaining learning goals and the technology use, whereas SRL strategies plus target-word-generation activities could be an acceptable design to provide a hands-on task while reducing students' learning anxiety.

3. Research method

3.1. Participants

A total of 47 Grade 3 students in two classes who were learning English as a Foreign Language (EFL) participated in this study in Taiwan. Their ages were between 10 and 11 and they had no prior experience of accessing AI recognition technologies, although they had 2 years' learning experience of fundamental English learning, like the alphabet, phonics and daily communication. The experimental group (EG) consisted of 20 students (11 male 55%; 9 female, 45%), using the AI image recognition system developed by the researchers to carry out real-object recognition learning, whereas the control group (CG) consisted of 27 students (15 male, 56%; 12 female, 44%), using the text-image recognition system to conduct optical character recognition learning. A teacher with 12 years' teaching experience and who was familiar with AI-supported lessons was assigned to the study. Through both recognition systems, both group of students were expected to acquire target words by accessing Chinese-to-English translation, the text-to-speech function, and hands-on query of target images or texts.

3.2. Instructional design

The students in the EG used the proposed mobile app (Figure 1, left). The Android-based mobile learning app was established using the Look Expansion Model from the MIT App inventor platform for this study. The existing model included up to 423 kinds of objects installed on mobile devices. Several specific functions in the app are as follows: (1) Camera: the learners took photos of objects related to the learnt words from the textbook (e.g. newspaper); (2) image recognition technology: the learners took photos of objects and generated target words with translation; (3) translation dictionary database: the app displays spelling and meanings in English and Chinese when the realia are recognised correctly; (4) text-to-speech function: the app provides the students with text-to-speech functions allowing audio-input experiences; (5) tactile realia: students can have tactile experiences by directly touching real objects; (6) past records: the learners could review recognised words in the history records. The procedure is that students firstly took pictures of the intended objects, and when the objects were recognised, the system then displayed spelling, pronunciation, bilingual translation and meanings of the target words, as well as past recognised records.

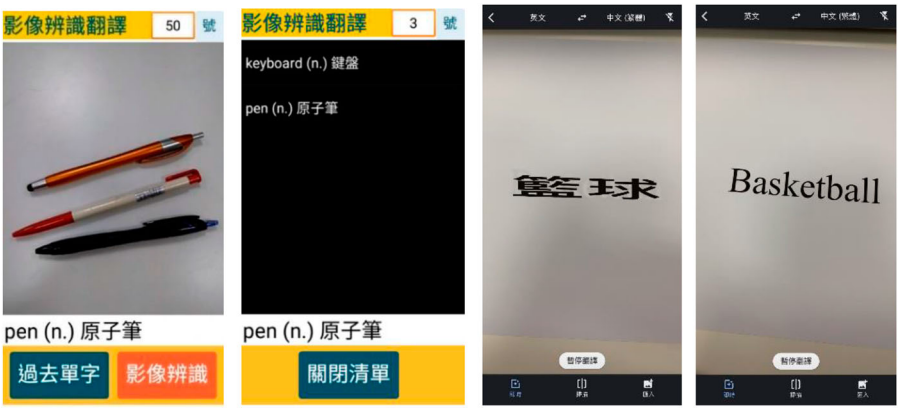

Figure 1. AI image recognition technologies using image (left) or text-image techniques (right).

Different from the EG, students in the CG used the Google Translate app to perform optical character recognition of target words (Figure 1, right). The app is an online corpus-derived engine that allows recognition of text images in digital form and translation into the target language. With a massive corpus of text, the Google Translate app has attracted many users for simple and quick data querying or translation searching. In this study, the app helped recognise printed text and provided the corresponding translation (Chinese to English). The procedure is that when students take a picture of the intended text extracted from the textbook, the English translation will immediately appear on the screen after the Chinese text has been recognised. It simultaneously shows the spelling, pronunciation, translation, meaning of the target word, and history records.

Both groups were also given guidelines to correctly use the recognition technologies. As Shadiev and Sun (2020) suggested, ITR could produce inaccurate results in some cases if users have no prior background of using it. As the young learners were involved in the use of recognition technologies, the researchers preliminarily tested the included objects or images and selected those which could attain better accuracy rates based on the classification technologies. The students were led to use several strategies to achieve the expected results: (1) ensuring a clear image, not a blur when the photo was taken so that ITR could easily classify the images; (2) ensuring obvious objects, not ambiguous ones and not overlapping with irrelevant objects when they aimed to obtain the label for the target objects. For example, if a label for the toothbrush on the daily-basis routine was obtained, any other items (e.g. pen) should not be included in the picture or the app would not be able to correctly classify the captured images and produce the label; (3) ensuring proper screen brightness on the device, otherwise the captured images seen on the camera could not be correctly classified. After the 15-minute training, students' accuracy rates for the image classification of their captured objects increased (i.e. reached 98%) compared with at the beginning (i.e. about 80%).

The study was immersed within an SRL learning process, where students were guided to develop their SRL. Before the learning, the instructor informed students of the learning task. They needed to complete the learning sheet of Tom's daily schedule (a short story), adapted from the textbook, by writing down the spelling, Chinese meaning, and correct pronunciation of certain words confirmed by the teacher. A total of 15 target words (either objects or images of objects vs. Chinese characters) were arranged around the classroom. Two students worked cooperatively to complete the task by following the slightly modified SRL process to perform the task. Specifically, the students were directed to the forethought phase (e.g. conducting recognition according to their plan, and help seeking if problems arose), the preparing phase (e.g. recognition operations, camera checking, and question checking), the performance phase using AI recognition techniques (e.g. self-examined recognised results, self-monitored target-word correction, spelling confirmation, correct

pronunciation self-evaluation), and the self-reflection phase (e.g. reflection upon their final query results by completing a checklist). All of these phases were treated as essential components of the SRL process for augmenting vocabulary acquisition.

As for the research design, both groups used the same materials and took part in an identical SRL process. The main difference between them was the use of image recognition techniques. The EG adopted AI-IR technology with the SRL process (Figure 2, left), in which images were arranged around the classroom and students accessed target words by recognising intended objects to complete the task requirements. In comparison, the CG adopted the AI-OCR technology with the SRL process (Figure 2, right), in which words were given around the classroom, and students accessed the target words by recognising the printed characters to finish the task. Concisely, students in both groups were immersed in manipulating multiple modalities of vocabulary input, and could focus on meaning and fluency development. Any inputs and target access involved in the intervention were designed for vocabulary acquisition.

3.3. Research process

This study adopted a quasi-experimental method (Figure 3). The 3-week experiment period involved two periods for English lessons (two weekly lectures of 120 min) and AI recognition integration (one weekly hands-on activity of 140 min). Prior to the study, the teacher taught must-learn words and conversational sentences using the textbook. The students took the pre-test that assessed their English vocabulary, and completed the questionnaire to examine their foreign language anxiety and self-regulated strategies of English learning. Then, instruction on conducting the learning task and using the mobile-based recognition app was given. After confirming students' understanding of the operation of the recognition technologies and reaching high accuracy rates of recognised results, the intervention was conducted using the designed AI-IR system with the SRL process for the EG, and the AI-OCR system with the SRL process for the CG. After the task, the students were asked to finish the post-test which had a similar level of difficulty as the pre-test, and completed the questionnaires on foreign language anxiety and self-regulated strategies. Lastly, the students' learning process was video-recorded; their behaviours were further analysed for the discussion.

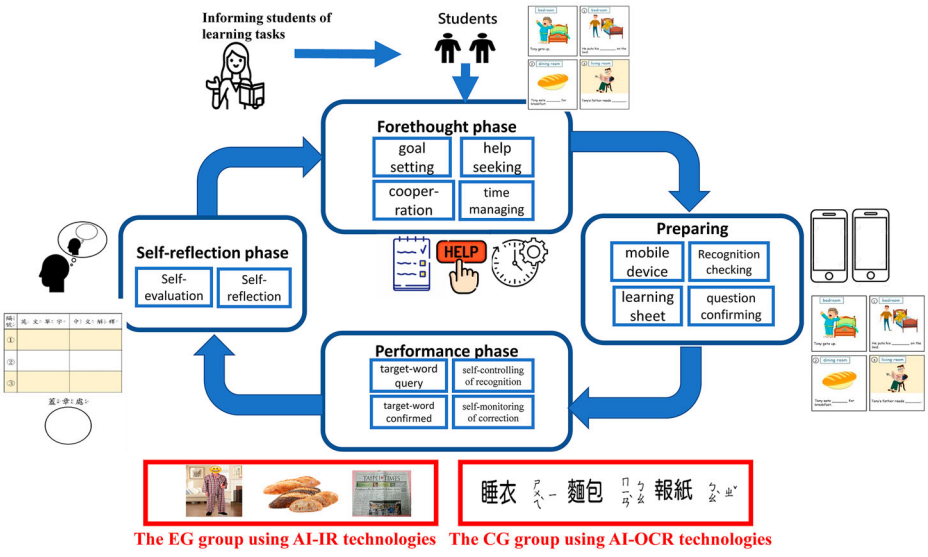

Figure 2. AI-IR with the SRL process (left) or AI-OCR with the SRL process (right).

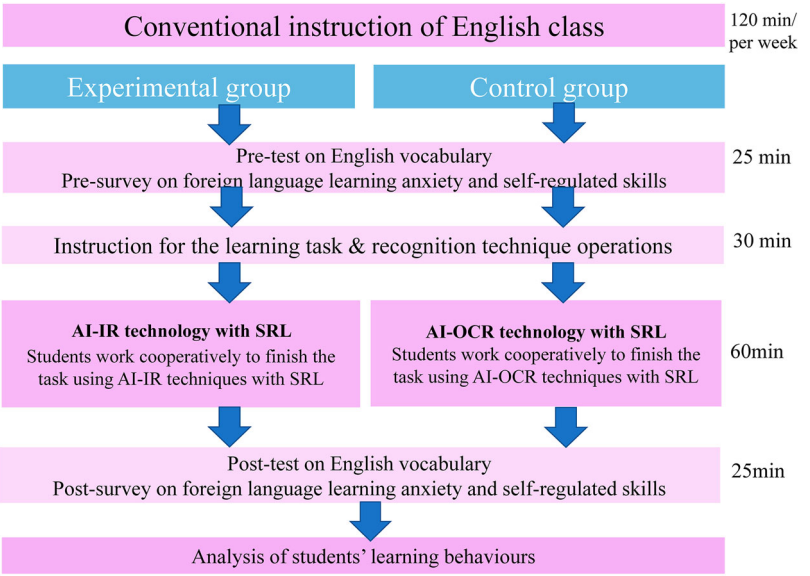

Figure 3. Research process.

3.4. Instruments

This study used four instruments: (1) & (2) the pre- and post-tests on English vocabulary knowledge; (3) self-regulated strategies for vocabulary learning; and (4) learning anxiety. The pre-test and post-test of vocabulary knowledge comprised 20 questions, including image-choice questions for correct vocabulary meaning (10 items worth 70 points), and multiple-choice questions with a single answer (3 items worth 30 points), with a full score of 100. One experienced English teacher and one technology education teacher along with the researchers ensured the reliability of the tests. An example of measuring students' vocabulary knowledge is as follows: Based on the picture, choose the correct word (Figure 4). Students needed to recognise target words in the picture based on their vocabulary knowledge. The other example of a multiple-choice question is as follows: Tony puts on his ___ and goes to the zoo. Which one is correct? (A) bathroom; (B) bank; (C) backpack. The target vocabulary "backpack" was the right answer.

Two questionnaires were applied. First, the self-regulated strategies in vocabulary acquisition questionnaire were adapted from Tseng et al.'s (2006) self-regulated strategies in vocabulary learning, with two dimensions of commitment control and environment control, and using a 6-point Likert scale (1 = *strongly disagree*; 6 = *strongly agree*). This study used four items for learning engagement control with an alpha value of .88, and three items for students' commitment control with an alpha value of .70 on self-regulating strategies in vocabulary learning when using AI recognition technology.

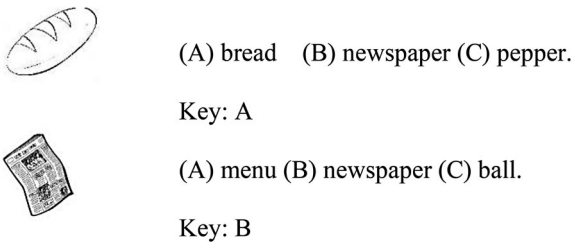

Figure 4. Two examples of image-choice questions for young learners.

Second, the language learning anxiety questionnaire was adapted from Horwitz et al. (1986) and Al-Khasawneh (2016), with a 5-point Likert scale (1 = *strongly disagree*; 5 = *strongly agree*) to evaluate the students' learning anxiety about the learning activity. After revising the wording to better reflect the present study context, a sample question reads, "The activities made me think about things that have nothing to do with English class'. The questionnaire consisted of seven items, focusing on learning anxiety in the English class, such as anxiety about the learning material, being nervous about English class, and fear of learning, with an alpha value of .93.

As for qualitative behaviour analysis, students' vocabulary learning behaviours were explored. Students' behaviours exhibited in the activity between and within groups were video-captured. The collected data involved students' posture, voices, and relevant learning behaviours. The Generalised Sequential Querier (GSEQ) software, which is specifically designed for qualitative behavioural analysis, was deployed to compile the data. Every 10 s was a note to verify the main action based on the video coding technique. After determining the coding schemes, the *Z*-score was used to examine, analyse, and offer insights into the differences and similarities between the coding schemes of the two groups in the ITR learning task. As for ensuring the reliability of the behavioural analysis, two experts experienced in technology education and EFL studies were invited to confirm the coding schemes. Two experts worked cooperatively with the researchers to confirm the suitability of the codes and the corresponding definitions. Based on students' actual actions recorded in the video, the corresponding behaviours under three categories were finally identified in Table A1 (Appendix).

4. Result

4.1. Effect on vocabulary acquisition

To answer the first question, ANCOVA was used to examine the progress of vocabulary when the pre-test scores were used as the covariate and the post-test scores as the dependent variable. As the assumption of homogeneity of regression was not violated ($F = 0.108$, $p = .74 > .05$), covariance analysis could be further conducted to interpret the results of their vocabulary acquisition after the activity. The results of the analysis of covariance confirmed that the students in the EG had significantly higher vocabulary acquisition ($F = 5.06^{**}$, $p = .006 < .01$; effect size = 0.11) than those in the CG (Table 1).

Paired sample *t* tests were further performed to examine the progress. The vocabulary acquisition of both groups significantly improved (Table 2). While students in the AI-OCR with SRL significantly improved ($t = -9.69^{***}$; $p < .001$) with a medium effect size (Cohen's $d = 1.06$) (Cohen, 2013), students in the AI-IR with SRL also significantly improved ($t = -8.85^{***}$; $p < .001$), but with a larger effect size (Cohen's $d = 1.54$) (Cohen, 2013).

4.2. Effect on self-regulation in vocabulary learning

In response to the second research question, ANCOVA was computed to examine the effect of the proposed approach on students' self-regulated strategies in vocabulary learning, utilising the pre-test scores as the covariate and the post-test scores as the dependent variable. As the assumption of homogeneity of regression was not violated ($F = 1.185$, $p = .18 > .05$), covariance analysis could be further performed. As shown in Table 3, although the EG which learnt with SRL using AI-IR

Table 1. Results of ANCOVA for vocabulary acquisition.

	N	*M*	*SD*	*Adjust M*	*SE*	*F*	Effect Size
EG	20	90.95	11.49	88.469	1.918	5.06**	0.11
CG	27	80.41	16.56	82.841	1.606		

Note. $^{**}p < .01$.

Table 2. Results of Paired sample t tests for vocabulary performance.

		Pre-test	Post-test			
	N	Mean *SD*	Mean *SD*	*t*	*p*	Effect size
EG	20	68.75 16.80	90.95 11.49	−8.85***	<0.001	1.54
CG	27	60.30 21.17	80.41 16.56	−9.69***	<0.001	1.06

Note. ***$p < 0.001$.

Table 3. Results of ANCOVA for self-regulated strategies in vocabulary learning.

		Pre-test	Post-test		
	N	Mean *SD*	Mean *SD Adj.M*	*SE*	*F*
EG	20	4.44 1.13	4.49 1.13 4.52	.222	0.013
CG	27	4.61 1.22	4.57 1.37 4.51	.259	

Table 4. Educational robot attitude scale independent *t*-test results between the two genders.

		Pre-test	Post-test		
	N	Mean *SD*	Mean *SD Adj.M*	*SE*	*F*
EG	20	4.34 0.61	2.23 0.50 2.24	.109	0.023
CG	27	4.31 0.88	2.24 0.80 2.22	.127	

scored slightly higher in their self-regulated skills in learning vocabulary (Adjusted Mean = 4.52, SD = 1.13) when compared to the CG which learnt with SRL using AI-OCR (Adjusted Mean = 4.51, SD = 1.37), no significant difference was found between the two groups' self-regulation ($F = 0.013$, $p = .97 > 0.05$).

4.3. Learning anxiety

To address the third research question, ANCOVA was used to rule out the discrepancy of learning anxiety between the two groups using the AI-supported recognition apps (Table 4). As the assumption of homogeneity of regression was not violated ($F = 0.018$, $p = .895 > .05$), covariance analysis could be further conducted to interpret the relationships between their learning anxiety in using the recognition translation apps after the activity. The result showed that no significant difference was found between the two groups in their learning anxiety with $F = 0.023$ ($p = .880 > 0.05$).

4.4. Analysis of the sequential behaviour patterns

In answering the fourth research question, sequential behaviour analysis was executed to examine the differences between the learning behaviours of the two groups. The behavioural sequence reaches a significant level ($p < .05$) when the Z value is more than 1.96 ($Z > 1.96$) (Bakeman & Gottman, 1997). Table 5 shows the Z values of the EG, revealing that 26 behaviour sequences reached the significant occurrence level, while Table 6 shows the Z values of the CG, revealing that 18 behaviour sequences reached the significant occurrence level. Based on the result, Figures 5 and 6 were generated to present the behavioural transition diagrams of the students involved in two methods; the z-scores are shown on the middle line and each line's direction represents its transfer direction. Consequently, a total of 34,074 behaviours were recorded, including 15,775 codes for the EG and 18,299 for the CG.

The main differences between the two groups are that the EG students presented seven statistically significant behaviour sequences, whereas the CG students showed only one statistically significant behaviour sequence (Figure 7).

Table 5. *Z* values of the EG.

	FT	VC	SR	VT	DP	CA	AQ	OB	IM	MC
FT	**37.29***	**20***	-8.16	**8.71***	**2.44***	-7.91	0.97	0.99	-1.72	-20.3
VC	-3.14	**84.69***	-14.87	**6.37***	**6.97***	-15.73	-0.91	**5.87***	-1.67	-39.07
SR	**10.39***	-21.54	98.25*	-4.67	-3.44	-15.08	-8.6	-3.41	-5.32	-49.21
VT	**2.44***	-2.11	6.84*	**48.92***	**3.59***	-7.54	-0.98	-0.49	0.53	-19.14
DP	-0.33	**3.99***	-1.69	**4.4***	**53.2***	-6.78	-0.85	**5.34***	0.52	-17.42
CA	-1.82	-15.72	-19.63	-6.82	-6.62	**116.32***	-7.81	-4.23	-8.43	-33.84
AQ	-0.92	0.11	-6.41	-0.74	-1.4	-7.37	**83.97***	-1.33	-1.05	-18.76
OB	0.58	**6.43***	-2.57	0.42	**2.86***	-3.96	-0.87	**48.84***	-1.01	-10.16
IM	0.38	-3.15	-6.26	0.29	-1.64	-8.19	**2.95***	0.59	**80.24***	-21.82
MC	-20.16	-38.74	-49.05	-19.08	-17.36	-35.05	-18.68	-10.12	-21.72	**125.18***

Note. *Z*-score > 1.96.

Table 6. *Z* values of the CG.

	FT	VC	SR	VT	DP	CA	AQ	OB	IM	MC
FT	**49.2***	**22.02***	-11.02	-2.51	0.28	-8.2	0.48	**3.06***	-2.26	-21.26
VC	-4.67	**84.24***	-2.58	**14.74***	**3.87***	-20.47	-1.67	1.95	-9.35	-45.67
SR	**5.51***	-13.18	**95.58***	-4.5	-2.06	-16.45	-4.84	-1.31	-12.06	-51.97
VT	-1.23	-2.23	**9.9***	**34.16***	0.41	-3.94	1.02	-0.53	-1.63	-9.28
DP	**4.19***	1.08	-1.92	0.41	**63.74***	-5.24	-1.33	1.92	-1.68	-13.22
CA	-1.45	-19.03	-22.03	-3.94	-4.67	**122.03***	-5.7	-1.5	-12.02	-34.43
AQ	-0.65	-0.37	-3.68	-0.93	-1.33	-5.51	**86.25***	0.56	-3.31	-13.38
OB	0.51	**3.34***	-2.15	1.36	0.58	-1.5	0.56	**42.34***	0.21	-4.51
IM	0.08	-9.64	-13.57	-1.94	-3.01	-11.21	-1.13	-1.07	**103.45***	-29.61
MC	-21.07	-45.33	-51.9	-9.25	-13.18	-35.55	-13.33	-4.5	-29.57	**134.81***

Note. *Z*-score > 1.96.

The seven significant behaviour sequences of the EG (Figure 7) are: FT → DP, FT ↔ VT, DP → VC, VC → OB, OB ↔ DP, VT → DP, and IM → AQ. During the activities, the EG students discussed in their pairs when they encountered problems with the learning sheet (FT → DP). After checking the target word, they also examined the past records, discussed its translation and read it out loud, and then confirmed the word again by checking the learning sheet (FT ↔ VT). When the app could not recognise the target word, they talked in their pairs, examined their operations, and asked themselves whether this was the correct target word for the answer (DP → VC). When students found inconsistency between the target word and the AI recognition result, they monitored their operations and observed the actions and methods of the other students, and then re-modified their operations to solve the problem (VC→OB). While using the cognition app, they kept discussing the recognised

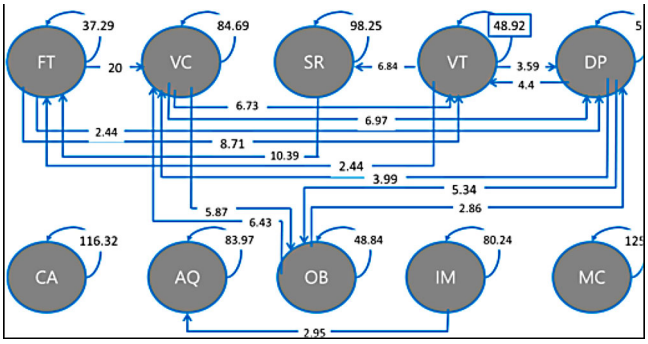

Figure 5. Behaviour patterns of the EG.

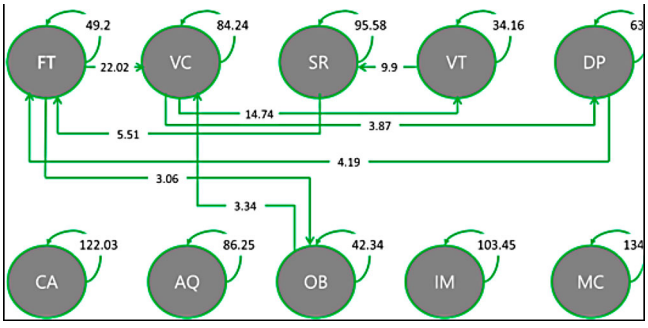

Figure 6. Behaviour pattern of the CG.

result and observed other groups' operations and progress (OB ↔ DP). They confirmed the recognised words and re-confirmed the translation, pronunciation, and spelling in their pairs (VT → DP). As the AI recognition app aroused their interest in checking the translation, they sometimes over-used the app by recognising other realia which were not included in the learning area, such as water bottles and dolls; in this case, the teacher would guide the students to complete the task first (IM → AQ).

One significant behaviour sequence of the CG (Figure 7) is DP → FT. Unlike the EG students' intensive interaction during the activity, the students appeared quiet. Although they confirmed the

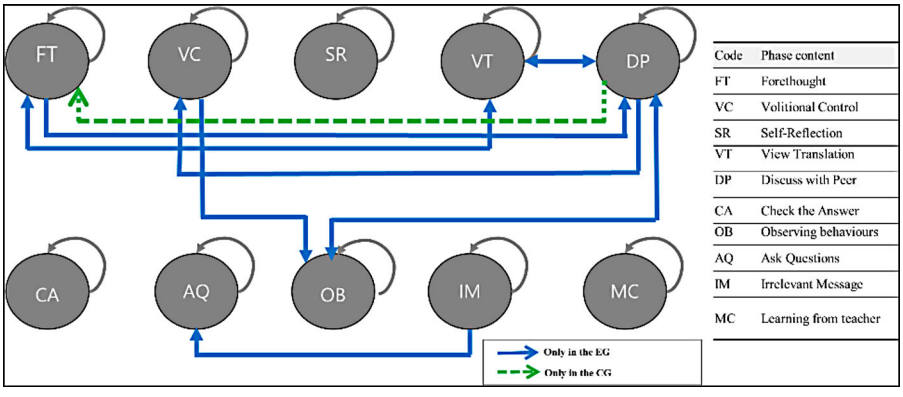

Figure 7. The differences between the two groups' behaviour patterns.

detailed demand of the target words by discussing with peers first to finish the task, they did not monitor their answers again or check other groups' operations. Compared with the behaviours of the EG students, students in the CG rarely presented learning behaviours relevant to checking the questions and finishing the tasks after recognising all the words.

5. Discussion

Using ITR for language learning has led educators to integrate innovative technologies into target-word generation recognition and to further go beyond text input into other AI-supported IG technologies such as using supervised machine learning for image classification (Hwang et al., 2022). Understanding that this notion needs to be tailored for meaningful activity design and pedagogically-informed approaches, ITR activities to enhance vocabulary acquisition must not solely focus on target-word-generation learning. Rather, they must provide students with input, output, and vocabulary recall to engage them in the repeated exposure to target-word learning, supporting their SRL development while reducing their language learning anxiety. Coupled with existing studies that have successfully presented outcomes using ITR (e.g. Shadiev et al., 2020a), critically designing activities with teaching strategies and validating their effects are scarce. Future research needs to consider whether integrating multiple recognition tools (e.g. location text recognition) with approaches is meaningful, appropriate, and engaging for the particular context where students are to engage in ITR study, since simply putting related components together cannot guarantee the expected outcomes.

5.1. Key point: input, output and vocabulary recall

Learning through a pedagogy-informed approach and designed ITR activities, both groups demonstrated significant improvement in their vocabulary learning. However, the findings shown in this study are worth considering as an alternative modality for EFL instructors and ITR practitioners who need to be careful of what requirements and expectations of target-word generation activities are deployed for young learners when they acquire vocabulary learning while accessing target objects in ITR tasks. Indeed, the results showed that the integration of input, output and vocabulary recall in target-word recognition interactions could be jointly developed using SRL strategies as proposed in this study. The ITR activity, along with SRL activities, can be developed using a target-word recognition design offering an open environment for flexibly repeated exposure to the target language as well as acceptable language-specific resources for vocabulary output practice. This design is viewed as important as studies investigating ITR in EFL settings argue that if young learners do not find ITR tasks interesting, they will not participate in hands-on target-word generation tasks regarding ITR (Shadiev et al., 2020b), nor will they discuss with their classmates while recognising the target word after detecting objects (Sun et al., 2015).

5.2. Critical analysis of learning differences between two groups

While ITR activities are often shared across contexts and learning subjects, critically analysing how they affect students' learning (**RQ1**) is often under investigation. Several reasons underlying the support for higher achievement in EG are as follows. One reason is that accessing realia (objects) helps activate active learning. For language courses in particular, the use of realia to bring authenticity has been emphasised since the 1990s, especially for young learners, because they have limited access to authentic input and few chances for language use beyond the classroom (Heaton, 1979). Realia help learners by constructing an associative bridge between the classroom and the real world (Heaton, 1979) and thus make language input as comprehensible as possible. As Berwald (1987) stated, realia "are not only a series of artefacts that describe the customs and traditions of a culture, but they are also a set of teaching aids that facilitate the simulation of experience in the

target culture" (p. 5). In this study, the EG students found objects interesting and were excited to take photos of the intended objects after they received the learning sheet. They felt curious about the generated results when the objects were seen through the camera. The CG students were also willing to take photos of printed texts (Chinese) but demonstrated less engaged and active learning as these printed texts (Chinese characters) were the same as the textbooks. Thus, accessing realia as the mediation of vocabulary knowledge instead of printed text on ITR technology activates young learners' curiosity and creates connections between the target words, the classroom, and the world. Concisely, realia use in AI-IR not only brought students into contact with the language used in the target contexts, but also reinforced the linguistic comprehensibility of the target words in a classroom-based environment, lowering demands on merely conscious attention to character meaning.

Another reason comes from the use of an AI-IR app that supports the interdependence of both the textbook-introduced vocabulary and real-world cognition. The concept was supported by the theory of authentic learning where learning cannot be disconnected from contexts (Collins, 1988). Classroom-based learning should afford students the opportunity to reflect on knowledge learnt in students' real-life contexts by working on meaningful real-world relevant tasks during class, thereby prompting their perceptions of real-life scenarios (Herrington & Herrington, 2006). One might argue that photos taken of realia using ITR in a traditional language classroom cannot be claimed as an authentic environment; however, the AI-supported image classification technology aids to bridge learning from classroom-based abstract learning to real-world cognition. When the learning contexts are simulated in formal language courses, the textbook-accessed and real-object vocabulary can be potentially linked in AI-IR learning (Nguyen et al., 2020), instead of access to printed texts only in the AI-OCR learning.

Accordingly, recognition technology is useful in either activating active learning or supporting an interdependent connection between text-book introduced and real-object vocabulary knowledge. Research has shown that using recognition technology in target-word teaching is viewed favourably by EFL learners since it is associated with satisfying learning results, such as English writing (e.g. Hwang et al., 2022), vocabulary retention (e.g. Shadiev et al., 2020a), and language competence (e.g. Nguyen et al., 2020). In this study, the AI-IR setting also benefited students in the engagement of the SRL learning cycle, such as the examples of observing their classification results, examining generated results (e.g. translation, sound), and taking active part in discussion in pairs, as evidenced by the analysis of students' learning behaviours.

Comparing students' learning behaviours (**RQ4**) in these two distinct forms of technology usage (AI-IR & AI-OCT), several potential challenges in target-word learning were revealed. Both groups provided multi-sensory experiences. However, the students in the EG reported consistently higher significant behaviour sequences than those of the CG.

They tended to plan their intended recognition words after receiving the learning sheet (presenting the forethought phase, FT → VC). Students worked in pairs where one would ensure that the camera was ready and the other would check whether the intended word was the one they needed for the answer to the task (Tom's daily schedule, showing the preparing phase, FT → DP). Once the recognised result was arrived at, they first monitored whether this target word was correct, and then evaluated its feasibility and filled in the answer (showing the performance phase, VT ↔ VC, VT → DP). One student would look up previous records to reflect on possible wrong answers when they misused the words (showing the reflective phase, VT → SR). The EG students demonstrated intensive interaction with target words, interest in the ITR activity, and had more discussion with pairs when involved in the SRL process cycle (FT → DP, DP → VC, OB → DP, VT → DP). Such interaction can be attributed to the fact that they enjoyed the vocabulary learning using the AI-IR-supported image classification technology, since their active involvement of target-word access was better than that of the CG group, echoing Shadiev et al.'s (2020a) finding in a study investigating vocabulary acquisition in authentic contexts using real-object recognition technology.

Conversely, the CG students demonstrated less interest in using OCR, and there was less interaction with pairs and the target words (DP → FT), although no significant differences in the statistical analysis of the two groups regarding SRL were found. It is possible that the CG students were fully familiar with the text-based modality without activating their imaginations of target-word learning after using OCR. Such monotonous interaction with OCR reduces the potential of learning as it builds less association and connection of visual and verbal representation in the target-word access, and learners have less awareness of the nuances of vocabulary knowledge (Nguyen et al., 2020; Shadiev et al., 2020b; Sun et al., 2015). They thus failed to fully engage in the SRL process of examining and ensuring the gained recognition while evaluating the results of the OCR learning. Therefore, in line with students' learning patterns (RQ 4), the EG students positively demonstrated their SRL learning process using AI-IR technology.

SRL **(RQ2)**, along with the ITR activity with a stress on the cycle of planning, monitoring, and evaluating in the ITR task and the target-word recognition nature of vocabulary learning also contributed to the expected results of the EG students, although no significant differences were found between the two groups regarding SRL. The EG showed their attention from attempting to use AI-IT to ensuring that they recognised the target words, monitored the results, checked the translation, and evaluated the outcomes to complete the task, along with discussing with their partners their process and results. ITR interaction echoes Shadiev et al.'s (2020a, 2020b) discussion, and it was found that the target-word generation from repeated object detection increased exposure to vocabulary in a new way. They suggested that such cognitive efforts are crucial for target-word acquisition, as they are interconnected with visual or auditory pathways that help organise such knowledge in students' working memory. Concisely, target-word recognition along with cognitive efforts can be considered optimal, as it also supports knowledge activation in long-term memory (Hwang et al., 2022; Mayer & Mayer, 2005).

In terms of learning anxiety **(RQ3)**, while students enjoyed AI-IR with their partners, they demonstrated consistently lower anxiety than their counterparts, as shown by the CG students, although no significant differences were found between the two groups regarding learning anxiety. Such lower anxiety is key for students' continued motivation and willingness to use ITR during the SRL vocabulary learning task. This confirms Cakici's (2016) investigation which found that less anxious learners had a positive experience when they attempted to understand the target language in a new way.

5.2.1. Training on the ITR

Time spent on training to use this app is needed when innovative image classification technologies were tailored to help EFL vocabulary learning. The self-developed app adopted the supervised machine learning techniques for image classification, where the convolutional neural network (CNN) algorithm was used to improve the effect and efficiency of target-object image classification while ensuring optimal accuracy and speed. Although this app proved to be helpful and feasible for vocabulary learning, training to ensure easy-to-use and greater accuracy rates of image classification technologies is essential. Thus, after 10 min of training, students' accuracy rates reached 98% of the ITR process, compared to accuracy rates of about 80% at the beginning.

5.3. Limitations

Some limitations should be clarified. First, although innovative technologies were tailored to the student-centred SRL vocabulary learning in the current study, it is acknowledged that the lack of a powerful database to support vocabulary learning in different categories of speech, such as adjectives in the proposed AI-IR app, is apparent. Although the learning content developed for the AI-IR app was adapted from the textbook, further studies can afford learners extensive use of the AI-IR database to recognise a wide range of images or objects, and offer them instant multimodalities of information in English learning (such as writing or speaking). Second, it may be hard to generalise the outcome, as a small sample size was recruited in this study. However, the results from the current study can serve as pioneering data for ITR-context practitioners and EFL teachers. Third, classroom

management of the technology application is another issue. Over-enthusiastic young learners are easily distracted when recognising objects using mobile devices. Sometimes students occasionally used their cameras to capture other objects (e.g. leaves, their peers' shoes) which were not included in the data. Indeed, students would not show great curiosity if they did not find the tasks engaging. However, being unable to concentrate on the task due to unnecessary distractions or abundant information on vocabulary knowledge can sometimes adversely affect learning. Finally, although AI-IR supports instructors in coping with vocabulary learning and in designing activities with pedagogical support, it essentially ensures findings from other angles for different participants, contexts, and institutions. We thus plan to apply this app to analyse the results of Mandarin courses using a similar approach to examine any difference after expanding the recognised translation database.

6. Conclusion

This study concludes that pedagogy-supported activities with AI image recognition integration were beneficial for facilitating young EFL students' learning in terms of their vocabulary acquisition, self-regulated strategies in learning, and anxiety-reduced learning in the use of AI recognition learning. The findings help expand the literature on the design of image recognition integration for EFL vocabulary activities.

Vocabulary will be of great significance in future language development. Drawing on the findings shown above, the challenges of vocabulary learning can be better coped with by integrating AI recognition technologies with pedagogy-informed activities. The number of students interested in vocabulary learning could increase if the same instructional design can be applied to other subjects, across contexts, or in other schools.

Disclosure statement

No potential conflict of interest was reported by the author(s).

Funding

This work was supported by Ministry of Science and Technology, Taiwan [grant number 108-2511-H-003 −056 -MY3.]. This study is supported partly by the National Science and Technology Council in Taiwan under the contract number NSTC 111-2410-H-003 −168 -MY3.

References

Al-Khasawneh, F. M. (2016). Investigating foreign language learning anxiety: A case of Saudi undergraduate EFL learners. *Journal of Language and Linguistic Studies*, *12*(1), 137–148. https://eric.ed.gov/?id=EJ1105172.

Bakeman, R., & Gottman, J. M. (1997). *Observing interaction: An introduction to sequential analysis*. Cambridge university press.

Berwald, J. (1987). *Teaching foreign languages with realia and other authentic materials. Q & As* (pp. 1–6). ERIC Clearinghouse on Languages.

Cakici, D. (2016). The correlation among EFL learners' test anxiety, foreign language anxiety and language achievement. *English Language Teaching*, *9*(8), 190–203. https://doi.org/10.5539/elt.v9n8p190

Cohen, J. (2013). *Statistical power analysis for the behavioral sciences*. Routledge.

Collins, A. (1988). *Cognitive apprenticeship and instructional technology* (Technical Report No. 6899). BBN Laboratories Inc. https://doi.org/10.21236/ADA203609.

Groves, M. J., & Mundt, K. (2015). Friend or foe? Google Translate in language for academic purposes. *English for Specific Purposes*, *37*, 112–121. https://doi.org/10.1016/j.esp.2014.09.001

Heaton, J. (1979). An audiovisual method for ESL. In M. Celce-Murcia & L. McIntosh (Eds.), *Teaching English as a second or foreign language*. Newbury House.

Herrington, A., & Herrington, J. (Eds.). (2006). What is an authentic learning environment? In *Authentic learning environments in higher education* (pp. 1–14). Information Science Publishing. https://doi.org/10.4018/978-1-59140-594-8.ch001

Horwitz, E. K., Horwitz, M. B., & Cope, J. (1986). Foreign language classroom anxiety. *The Modern Language Journal*, *70*(2), 125–132. https://doi.org/10.1111/j.1540-4781.1986.tb05256.x

Hu, L., & Wang, N. (2014). Anxiety in foreign language learning. 2014 International Conference on Global Economy, Commerce and Service Science (GECSS-14).

Huang, H. L., Hwang, G. J., & Chen, P. Y. (2022). An integrated concept mapping and image recognition approach to improving students' scientific inquiry course performance. *British Journal of Educational Technology*, *53*(3), 706–727. https://doi.org/10.1111/bjet.13177

Hwang, G. J., Chang, S. C., Chen, P. Y., & Chen, X. Y. (2018). Effects of integrating an active learning-promoting mechanism into location-based real-world learning environments on students' learning performances and behaviors. *Educational Technology Research and Development*, *66*(2), 451–474. https://doi.org/10.1007/s11423-017-9567-5

Hwang, W. Y., Nguyen, V. G., & Purba, S. W. D. (2022). *Systematic survey of anything-to-text recognition and constructing its framework in language learning*. Education and Information Technologies, 1–27.

Johnson, M. D., Acevedo, A., & Mercado, L. (2016). Vocabulary knowledge and vocabulary use in second language writing. *TESOL Journal*, *7*(3), 700–715. https://doi.org/10.1002/tesj.238

Liu, S. H. J., Lan, Y. J., & Ho, C. Y. Y. (2014). Exploring the relationship between self-regulated vocabulary learning and web-based collaboration. *Journal of Educational Technology & Society*, *17*(4), 404–419. https://www.jstor.org/stable/jeductechsoci.17.4.404.

MacIntyre, P. D. (1999). Language anxiety: A review of the research for language teachers. In D. J. Young (Ed.), *Affect in foreign language and second language teaching: A practical guide to creating a low-anxiety classroom atmosphere* (pp. 24–45). Mc Graw-Hill.

Mayer, R., & Mayer, R. E. (2005). *The Cambridge handbook of multimedia learning*. Cambridge University Press.

Murtisari, E. T., Widiningrum, R., Branata, J., & Susanto, R. D. (2019). Google translate in language learning: Indonesian EFL students' attitudes. *Journal of Asia TEFL*, *16*(3), 978. http://dx.doi.org/10.18823/asiatefl.2019.16.3.14.978

Nation, I. S. (2001). *Learning vocabulary in another language*. Cambridge University Press.

Nguyen, T. H., Hwang, W. Y., Pham, X. L., & Ma, Z. H. (2018). User-oriented EFL speaking through application and exercise: Instant speech translation and shadowing in authentic context. *Educational Technology and Society*, *21*(4), 129–142. https://www.learntechlib.org/p/190838/.

Nguyen, T. H., Hwang, W. Y., Pham, X. L., & Pham, T. (2020). Self-experienced storytelling in an authentic context to facilitate EFL writing. *Computer Assisted Language Learning*, 1–30. https://doi.org/10.1080/09588221.2020.1744665

Pacheco-Venegas, N. D., López, G., & Andrade-Aréchiga, M. (2015). Conceptualization, development and implementation of a web-based system for automatic evaluation of mathematical expressions. *Computers & Education*, *88*, 15–28. https://doi.org/10.1016/j.compedu.2015.03.021

Paivio, A. (1986). *Mental representations: A dual coding approach*. Oxford University Press.

Peker, H., Regalla, M., & Cox, T. D. (2018). Teaching and learning vocabulary in context: Examining engagement in three prekindergarten French classrooms. *Foreign Language Annals*, *51*(2), 472–483. https://doi.org/10.1111/flan.12338

Şahin Kızıl, A., & Savran, Z. (2018). Assessing self-regulated learning: The case of vocabulary learning through information and communication technologies. *Computer Assisted Language Learning*, *31*(5-6), 599–616. https://doi.org/10.1080/09588221.2018.1428201

Saranraj, L., & Meenakshi, K. (2016). The influence of anxiety in second language learning: A case study with reference to engineering students in tamil nadu, India. *Indian Journal of Science and Technology*, *9*(42), 1–5. https://doi.org/10.17485/ijst/2016/v9i42/102044

Schmitt, N. (2008). Review article: Instructed second language vocabulary learning. *Language Teaching Research*, *12*(3), 329–363. https://doi.org/10.1177/1362168808089921

Shadiev, R., & Sun, A. (2020). Using texts generated by STR and CAT to facilitate student comprehension of lecture content in a foreign language. *Journal of Computing in Higher Education*, *32*(3), 561–581.

Shadiev, R., Wu, T. T., & Huang, Y. M. (2020a). Using image-to-text recognition technology to facilitate vocabulary acquisition in authentic contexts. *ReCALL*, *32*(2), 195–212. https://doi.org/10.1017/S0958344020000038

Shadiev, R., Zhang, Z. H., Wu, T. T., & Huang, Y. M. (2020b). Review of studies on recognition technologies and their applications used to assist learning and instruction. *Educational Technology & Society*, *23*(4), 59–74. https://www.jstor.org/stable/26981744.

Sun, J. C. Y., Chang, K. Y., & Chen, Y. H. (2015). GPS sensor-based mobile learning for English: An exploratory study on self-efficacy, self-regulation and student achievement. *Technology Enhanced Learning*, *10*(1), 1–18.

Tsai, S. C. (2019). Using google translate in EFL drafts: a preliminary investigation. *Computer Assisted Language Learning*, *32*(5-6), 510–526. https://doi.org/10.1080/09588221.2018.1527361

Tseng, W.-T., Dörnyei, Z., & Schmitt, N. (2006). A new approach to assessing strategic learning: The case of self-regulation in vocabulary acquisition. *Applied Linguistics*, *27*(1), 78–102. https://doi.org/10.1093/applin/ami046

Zimmerman, B. J. (2002). Becoming a self-regulated learner: an overview. *Theory Into Practice*, *41*(2), 64–70. https://doi.org/10.1207/s15430421tip4102_2

Zou, D., Huang, Y., & Xie, H. (2021). Digital game-based vocabulary learning: where are we and where are we going? *Computer Assisted Language Learning*, *34*(5-6), 751–777. doi:10.1080/09588221.2019.1640745

Appendix

Table A1. The coding scheme of behaviours.

	Code	Definition	Description	Example
SRL behaviour	FT	Forethought	Thinking plan before studying	Thinking about the target wards after examining the questions
	VC	Volitional Control	Volitional control in learning	Self-monitoring whether the AI image recognition translation result is consistent with the target word
	SR	Self-Reflection	Self-reflection after learning	Complete a checklist, review and reflect on their learning
Relevant Learning behaviour	VT	View Translation	Checking translation	View translation results and records
	DP	Discuss with Peer	Discuss with peers	Discuss with peers
	CA	Check the Answer	Confirm answer	Find the teacher or teaching assistant to check the answers or read the words out loud
	OB	Observing Behaviours	Observing peers	Observe the operations and actions of peers
	AQ	Ask Questions	Ask questions	Teacher or teaching assistants assist students with questions related to learning activities
Others	IM	Irrelevant Message	Irrelevant to class	Carry out actions that are irrelevant to the course, such as chatting or fooling around
	MC	Learning from Teacher	Mission Completed	Complete the learning tasks